Tightening procedure for studs on axially split pumps

COPY COMPLIANT to the original document resident on the computer system at the time of printing

Index

1. Purpose. 3
2. Scope. 3
3. Definitions. 3
4. General procedure: description 4
5. Tightening procedure 6
   5.1. Tools used for tightening 6
   5.2. Preliminary checks 7
   5.3. Tightening sequence 8
   5.4. Precautions to prevent stud bending 10

COPY COMPLIANT to the original document resident on the computer system at the time of printing

1. Purpose & Scope

The procedure applies exclusively to BB axially split pumps and to the tightening procedure for studs. Specifically, the purpose of the document is to define the tightening sequence and the actions to avoid during this operation, both to prevent damage to the studs and to ensure proper sealing of the pump casing under pressure.

This procedure is applicable to BB1 and BB3 pumps.

This procedure applies to the whole Organization.

2. Definitions

BB: Between Bearings (API610).

BB1: Axially split, single-stage or two-stage pumps (API 610).

BB3: Axially split, multistage, between-bearings pumps (API 610).

Pressure casing: An assembly of all stationary pressure-containing parts of the pump, including all nozzles, seal glands, seal chambers, and auxiliary connections but excluding the stationary and rotating components of mechanical seals (API 610).

3. General procedure: description

For axially split pumps, it is essential to use an appropriate tightening procedure to achieve:

- uniform distribution of stress: by tightening with the correct pattern, it is possible to avoid compressing one area of the flange before the others, thus reducing local deformations.
- prevention of ovalization: the axially split casing is sensitive to deformation; uneven tightening can cause misalignment between the halves and ovalize the impeller housing.
- optimal sealing: ensures that the gasket between the two halves of the pump is compressed evenly, preventing leaks.
- reduction of concentrated stresses: prevents adjacent studs from being subjected to excessive loads, increasing the service life of the components.
- mechanical alignment: maintains the correct internal geometry, which is essential for the radial and axial clearances required by API 610 standard.

Figure 1 shows a typical arrangement of the pressure casing of a BB3 pump.

COPY COMPLIANT to the original document resident on the computer system at the time of printing

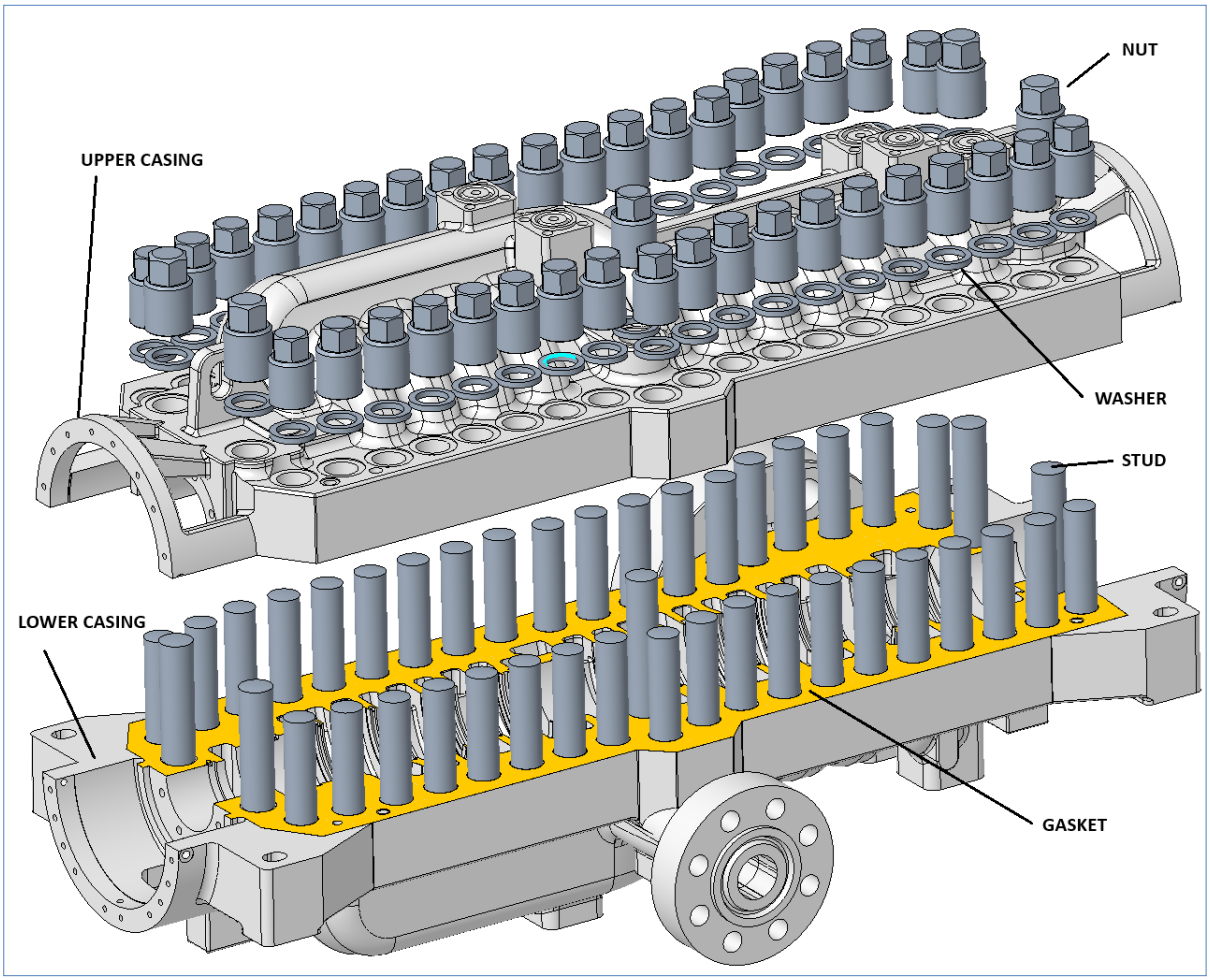

Figure 1: BB3 pressure casing.

COPY COMPLIANT to the original document resident on the computer system at the time of printing

4. Tightening procedure

4.1. Tools used for tightening

The tool generally used to tighten the nuts on axially split pumps is a hydraulic wrench equipped with a reaction arm, as shown in *Figure 2*. The reaction arm serves to absorb the torque during tightening, preventing the wrench from rotating.

Figure 2: Hydraulic wrench.

4.2. Preliminary checks

Before starting the tightening, it is necessary to know the tightening torque.

The tightening torque may vary depending on the diameter of the studs, the materials, and the preload that must be applied to the stud.

The value of the tightening torque to be applied can be found in the following documents:

- Assembly drawing (only if available, not prepared for all orders).
- Pump manual.

For the calculation of the tightening torque, refer to **SOP-521**.

COPY COMPLIANT to the original document resident on the computer system at the time of printing

4.3. Tightening sequence

For the reasons listed in Chapter 3, tightening is carried out according to the following rules:

- Use anti-seize (MOLY o nickel) on threads.
- Tightening is performed in a circular pattern, starting from the center and alternating side to side, then moving outward, as shown in *Figure 3*: Tightening sequence.
- Torque is not applied all at once but is divided into four steps according to the table below.

STEP	TIGHTENING RATIO
1	25%
2	50%
3	75%
4	100%

Table 1: Tightening ratio.

COPY COMPLIANT to the original document resident on the computer system at the time of printing

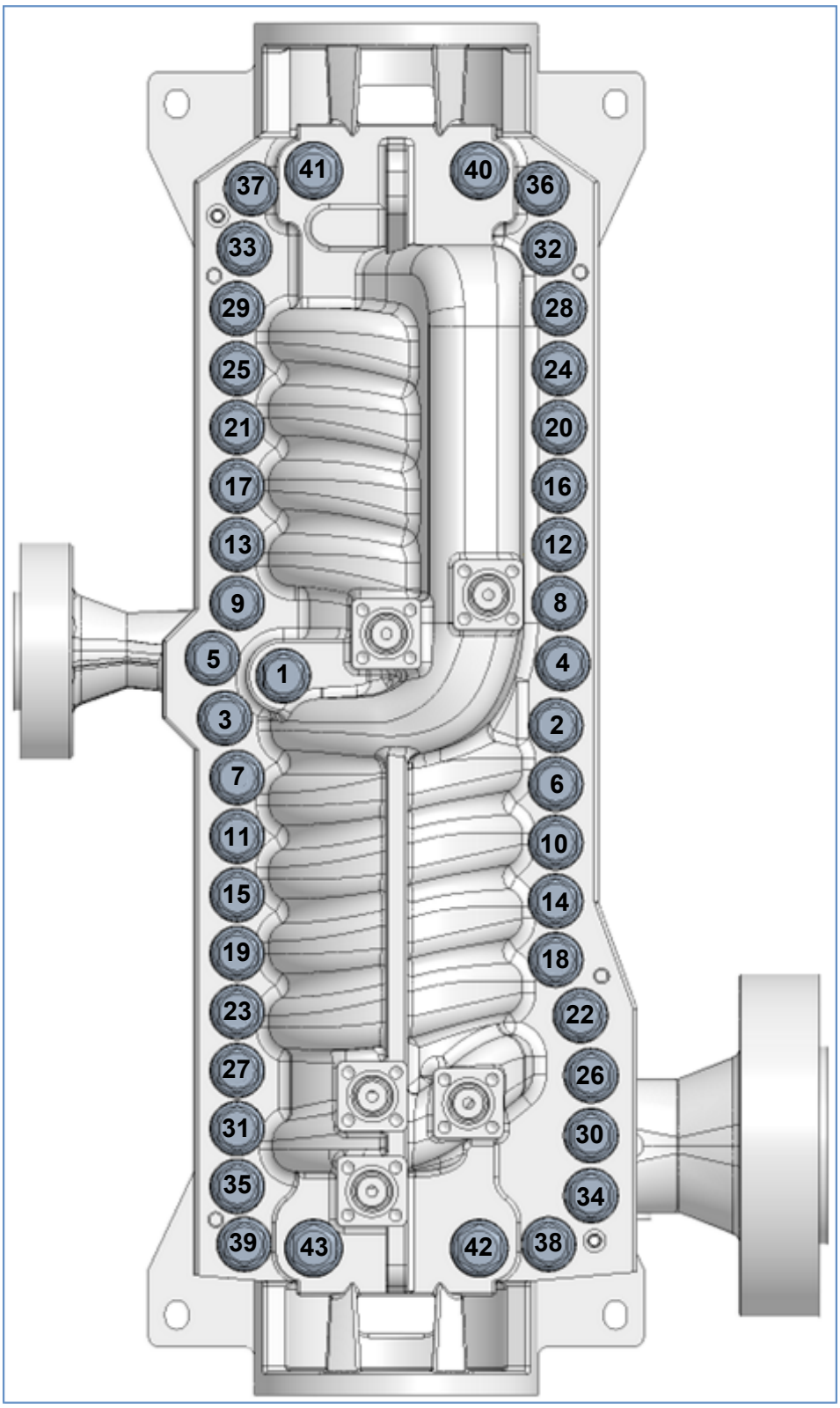

Figure 3: Tightening sequence.

COPY COMPLIANT to the original document resident on the computer system at the time of printing

4.4. Precautions to prevent stud bending

During the tightening phase, the torque of the hydraulic wrench must never be discharged onto other nuts/studs. Therefore, the reaction arm must only be in contact with other surfaces of the pump casing.

Below are two examples of correct and incorrect tightening.

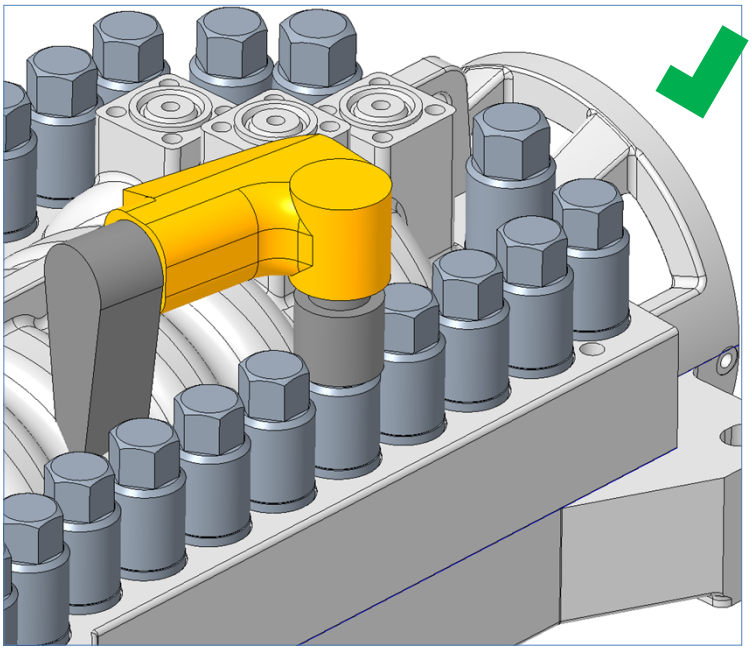

Figure 4: Proper use of the torque wrench.

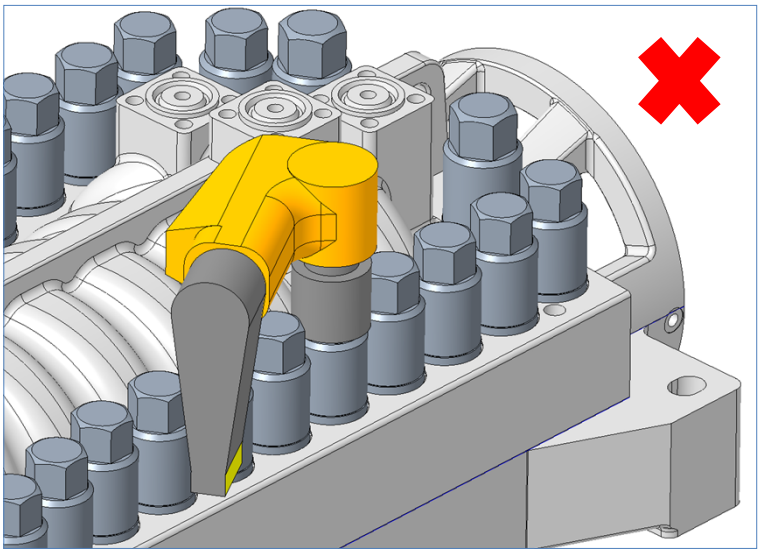

Figure 5: Improper use of the torque wrench.

COPY COMPLIANT to the original document resident on the computer system at the time of printing

5. References

SOP-521 *– Bolts tightening torque*

Mod.497 *– Tightening torque*

COPY COMPLIANT to the original document resident on the computer system at the time of printing